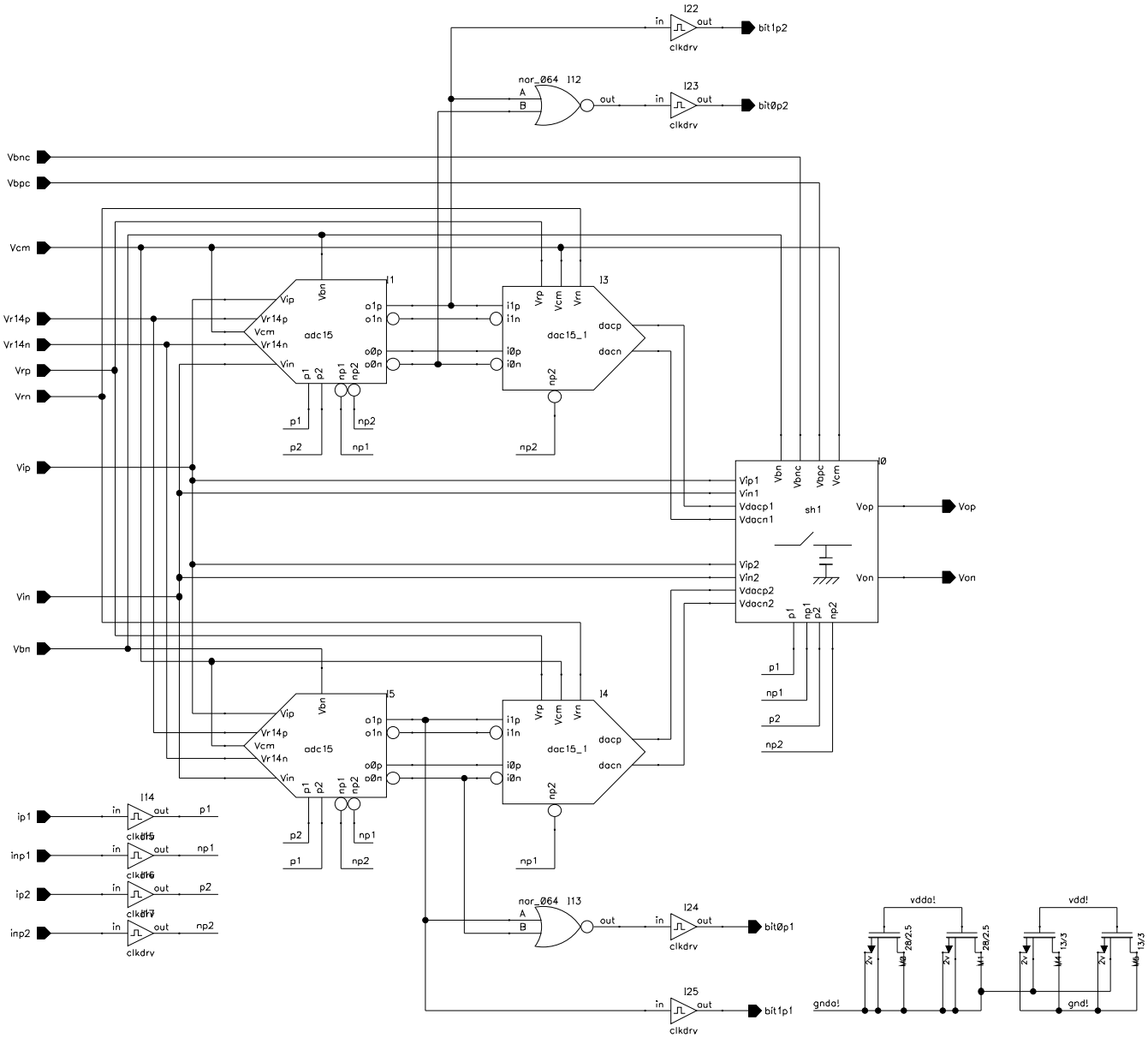
I22
in
out
clkdrv
bit1p2
nor_Ø64 I12
A
B
out
I23
in
out
clkdrv
bitØp2
Vbnc
Vbpc
Vcm
Vr14p
Vr14n
Vrp
Vrn
Vip
Vin
Vbn
I1
Vip
Vbn
Vr14p
Vcm
Vr14n
Vin
adc15
o1p
o1n
oØp
oØn
p1
p2
np1
np2
I3
Vrp
Vcm
Vrn
i1p
i1n
iØp
iØn
dac15_1
dacp
dacn
np2
IØ
Vip1
Vin1
Vdacp1
Vdacn1
Vbn
Vbnc
Vbpc
Vcm
sh1
Vop
Von
Vip2
Vin2
Vdacp2
Vdacn2
p1
np1
p2
np2
I5
I4
I14
ip1
inp1
ip2
inp2
clkdrv
nor_Ø64 I13
bitØp1
I24
I25
bit1p1
vdda!
vdd!
gnda!
gnd!
2v
28/2.5
13/3