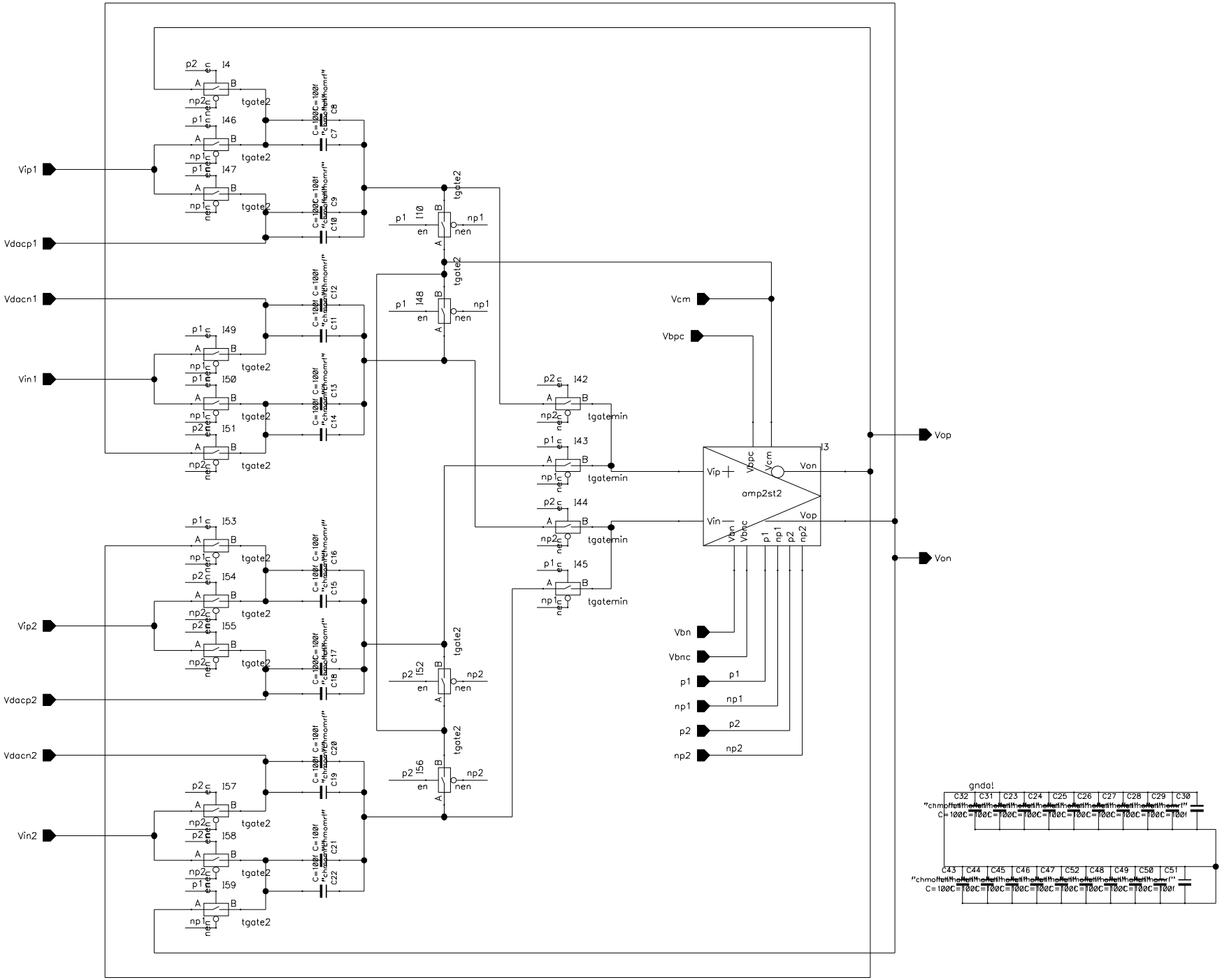
Vip1
Vdacp1
Vdacn1
Vin1
Vip2
Vdacp2
Vdacn2
Vin2
Vcm
Vbpc
Vbn
Vbnc
p1
np1
p2
np2
Vop
Von
I3
amp2st2
Vip
Vin
tgate2
tgatemin
gnda!